Small Compact Thermostat

KTO 011 / KTS 011

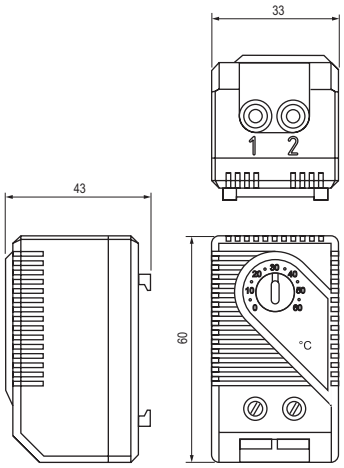

- > Large setting range
- > Small size
- > Simple to mount
- > High switching performance

KTO 011: Thermostat (normally closed); contact breaker for regulating heaters. The contact opens when temperature is rising.

KTS 011: Thermostat (normally open); contact maker for regulating of filter fans and heat exchangers or for switching signal devises when temperature limit has been exceeded. The contact closes when temperature is rising.

Technical Data

CE RoHS ISO9001 Patent

KTO 011 / KTS 011	
Switch temperature difference	+/-5°C
Sensor element	thermostatic bimetal
Contact type	snap-action contact
Service life	> 100,000 cycles
Max. switching capacity	250VAC, 10 (2) A / 120VAC, 15 (2) A DC 30W at 24VDC to 72VDC
Max. inrush current	AC 16A for 10 sec.
Connection	2-pole terminal, clamping torque 0.5Nm max.: rigid wire 2.5mm² (AWG 14) stranded wire[1] 1.5mm² (AWG 16)
Mounting	clip for 35mm DIN rail, EN 60715
Casing	plastic according to UL94 V-0, light grey
Dimensions	60 x 33 x 43mm
Weight	approx. 40g
Fitting position	variable
Operating/Storage temperature	-45 to +80°C (-49 to +176°F)
Operating/Storage humidity	max. 90% RH (non-condensing)
Protection type	IP20

[1] When connecting with wires, wire end ferrules must be used.

Important note: The contact system of the regulator is subjected to environmental influences, thus the contact resistance may change. This can lead to a voltage drop and/or self-heating of the contacts.

Connection diagrams

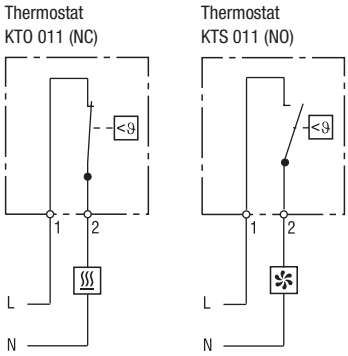

Heater

Filter fan, Cooling equipment, Signal device

Examples of connection

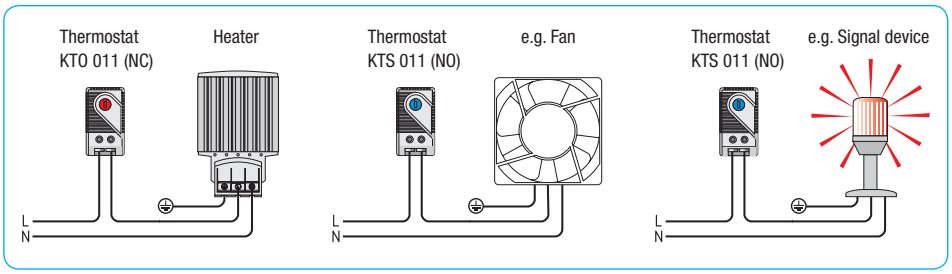

Art. No. Contact breaker (NC)	Art. No. Contact maker (NO)	Setting range
01140.0-00	01141.0-00	0 to +60°C
01142.0-00	01143.0-00	-10 to +50°C
01159.0-00	01158.0-00	+20 to +80°C
01140.9-00	01141.9-00	+32 to +140°F
01142.9-00	01143.9-00	+14 to +122°F

WENZHOU NATURAL
AUTOMATION EQUIPMENT CO., LTD.

www.dobettergroup.com Tel: +86-577-62787886 Fax: +86-577-62768368 Mobile: +86-15088970667 sales@dobettergroup.com